CORA Cork Open Research Archive
Cartlann Taighde Oscailte Chorcaí

Title	High-beamforming power code multiplexed optical scanner for three dimensional displays.
Authors	Arain, Muzammil A.;Riza, Nabeel A.
Publication date	2003-11-26
Original Citation	Arain, M. A. and Riza, N. A. (2003) 'High-beamforming power code multiplexed optical scanner for three dimensional displays', Proceedings of SPIE, 5243, Three-Dimensional TV, Video, and Display II, ITCom 2003, Orlando, Florida, United States. doi: 10.1117/12.508160
Type of publication	Conference item
Link to publisher's version	10.1117/12.508160
Rights	© 2003 Society of Photo-Optical Instrumentation Engineers (SPIE). One print or electronic copy may be made for personal use only. Systematic reproduction and distribution, duplication of any material in this paper for a fee or for commercial purposes, or modification of the content of the paper are prohibited.
Download date	2024-05-13 00:20:29
Item downloaded from	https://hdl.handle.net/10468/10160

UCC
University College Cork, Ireland
Coláiste na hOllscoile Corcaigh

PROCEEDINGS OF SPIE

SPIEDigitalLibrary.org/conference-proceedings-of-spie

High-beamforming power-code-multiplexed optical scanner for three-dimensional displays

Arain, Muzammil, Riza, Nabeel

Muzammil A. Arain, Nabeel A. Riza, "High-beamforming power-code-multiplexed optical scanner for three-dimensional displays," Proc. SPIE 5243, Three-Dimensional TV, Video, and Display II, (26 November 2003); doi: 10.1117/12.508160

Event: ITCom 2003, 2003, Orlando, Florida, United States

Downloaded From: https://www.spiedigitallibrary.org/conference-proceedings-of-spie on 07 Jun 2020 Terms of Use: https://www.spiedigitallibrary.org/terms-of-use

High Beamforming Power Code Multiplexed Optical Scanner for Three Dimensional Displays

Muzammil A. Arain and Nabeel A. Riza
Photonic Information Processing Systems Laboratory
The School of Optics/Center for Research and Education in Optics and Lasers (CREOL)
University of Central Florida, 4000 Central Florida Blvd., Orlando, FL 32816-2700
Tel: 407-823-6829; Fax: 407-823-6880; E-mail: nriza@mail.ucf.edu

ABSTRACT

Three dimensional (3-D) displays play an important role in the field of entertainment. Today, research is being conducted to produce 3-D displays to meet the complex needs of high-functionality full motion 3D displays at reasonable cost, but without glasses, complicated viewing arrangements or restricted fields of view. Other applications for 3-D displays include but are not limited to CAD/Design simulation, advanced data representation, displaying complex 3-D information for automotive design, medical imaging, advanced navigation displays, scientific visualization, and advertising. The key element in all these applications is an optical beam scanner that can display 3-D images for large viewing angles. Our proposed Code Multiplexed Optical Scanner (C-MOS) can fulfill all these requirements with its high beamforming power capabilities. Our proposed experiment demonstrates three dimensional (3-D) beam scanning with large angles (e.g., > 160^0), large centimeter size aperture, and scanning speed of <300 μsec. The robust construction and simple operation of the C-MOS makes it very useful and attractive for deployment in the field of entertainment, defense and medical imaging. Here we report the application of the C-MOS for three dimensional (3-D) displays.

Keywords: 3-D Display, Code Multiplexed Optical Scanner, Holography.

1. INTRODUCTION

The increased use of lasers in the fields of entertainment, communications, defense, biomedicine, and material characterization requires accompanying improvements in laser beam steering technology. Optical scanning can be defined as a controlled movement of a point of light in space. An ideal optical scanner is application dependent but generally should have a large aperture, wide scan angles, 3-D beam control, no moving parts, high beam scanning resolution, low power consumption. In addition, this scanner should be high speed, light weight, simple to control, and provide reconfigurability. A number of different scanning technologies have been developed to reach these goals with limited success. These technologies include acousto-optics[1], bulk crystal electro-optics [2], integrated piezoceramic electro-optics [3], and microelectromechanical system (MEMS) [4].

Recently, an optical scanning technology called ìMultiplexed Optical Scanner Technologyî or ìMOSTî was introduced to address the ideal scanner requirements [5]. MOST exploits different attributes of the light wave to realize a scanner. For instance, wavelength tuning and selection coupled with dispersive optics are used to realize the Wavelength Multiplexed Optical Scanner (W-MOS) [6-11]. In a similar light, the Polarization Multiplexed Optical Scanner (P-MOS) exploits digital polarization switched access of electronically programmable birefringent beamformers to realize a fully programmable 3-D scanner for linearly polarized optical beams [12-14]. Another member of the MOST family is the C-MOS [15,16] that implements a 3-D optical scanner via two dimensional (2-D) spatial code activated access of holographically stored 3-D beam scan wavefront information.

In this paper, the C-MOS concept is used to demonstrate a novel architecture for C-MOS based 3-D displays that donot require any special viewing arrangements and produces a true 3-D images.

Downloaded From: https://www.spiedigitallibrary.org/conference-proceedings-of-spie on 07 Jun 2020
Terms of Use: https://www.spiedigitallibrary.org/terms-of-use

2. C-MOS AND HOLOGRAPHY

Over the years since the invention of the laser, holography [17] has found numerous applications such as in test and measurement [18], signal processing [19], entertainment [20,21], and image data storage [22]. This paper introduces the use of holography for 3-D inertialess beam scanning using spatial 2-D orthogonal set phase encoding of the input beam. Fig. 1(a) shows the proposed C-MOS concept in the transmissive recording geometry that leads to the generation of an in-line scanning beam. The C-MOS assembly requires the holographic recording of a set of N 3-D scan reference beams with N independent 2-D phase encoded signal beams. Specifically, each 3-D scan beam is recalled by imposing its specific 2-D code on the input laser beam (see Fig. 1 (b)). Codes and 3-D beam generation optical information can be generated via static optics such as moving mirrors and phase-coded plates and/or by programmable optics such as spatial light modulators (SLM) as shown in Fig. 1.

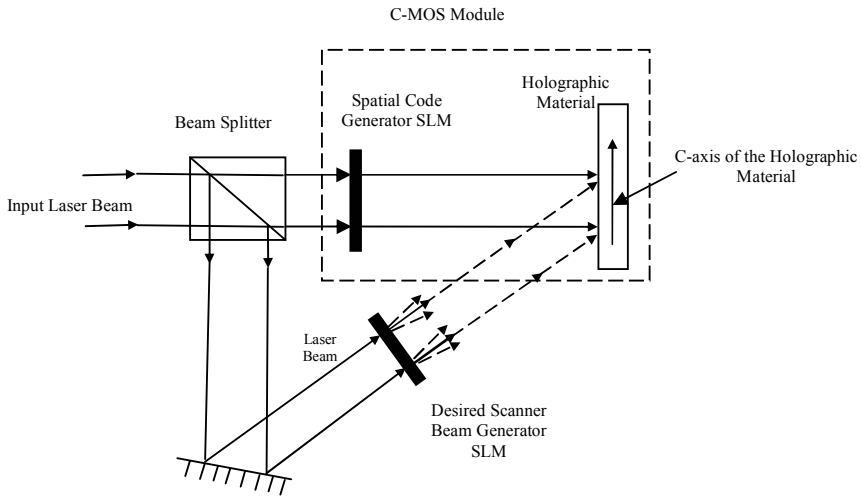

(a)

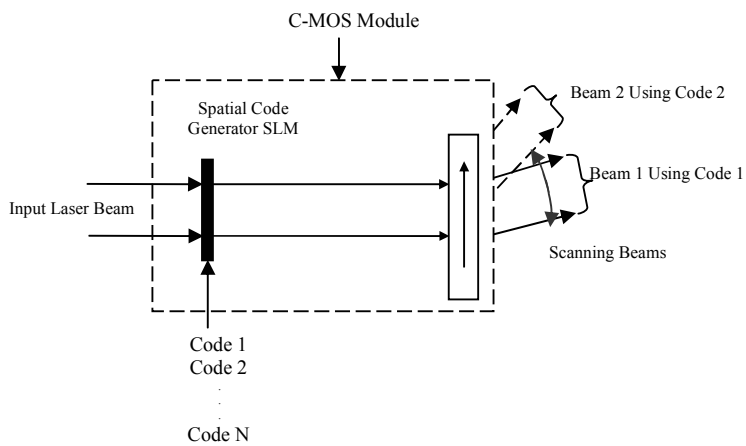

(b)

Fig. 1. C-MOS creation and operation shown where a) shows the hologram recording with changing optical phase codes in a transmissive assembly, and b) shows hologram reading for C-MOS realization in transmissive assembly.

Downloaded From: https://www.spiedigitallibrary.org/conference-proceedings-of-spie on 07 Jun 2020
Terms of Use: https://www.spiedigitallibrary.org/terms-of-use

3. C-MOS EXPERIMENT

We now describe our proof of concept experiment, in which we have successfully shown the capabilities of C-MOS for 3-D beam steering. Using an orthogonal set of spatial codes (e.g. binary phase only codes or Hadamard codes) implemented through an SLM in the path of the laser input, a set of holograms is recorded in a photorefractive crystal. Here each hologram is stored with a different reference scan beam incident on the holographic material at a different angle. After storing and fixing all the holograms, the scan reference beam is blocked and the spatial codes are regenerated on the input laser beam. Via holographic reconstruction, each spatial code generates its original scan beam that at the exit of the C-MOS creates the output scanned beams. Hence, by cycling through spatial codes, via an SLM, a C-MOS is realized for 3-D scans.

Fig. 2 shows the C-MOS demonstration experimental setup. Collimated light from a 532 nm Nd:YAG laser is s-polarized and expanded using two lenses L_1 and L_2 making an afocal system with 12.05 magnification. An aperture is used to select the central portion of the collimated beam with uniform intensity. A 50:50 beam splitter is then used to split the incident beam into two beams. One of the beams goes to the reflective optically addressed Parallel Aligned Nematic Liquid Crystal (PAN LC) SLM, reads the coded phase information, and follows the same path through the beam splitter to reach the photorefractive crystal. The other beam (reference) reaches the adjacent face of the photorefractive crystal to record a hologram in 90° geometry through a combination of mirrors M_1 and M_2 that are used to generate x and y tilts. L_3 is a movable weak lens with focal length f_3 (75 cm in our case) that is inserted into the path to produce z-axis or 3-D translation of a scan beam. The output scanned beam is focused via lens L_4onto the 2-D imaging charge coupled device (CCD). For readout purposes, the reference beam is blocked and corresponding phase code patterns are applied to the SLM driver again to produce the scanning beams in space via holographic reconstruction. The scan speed of the C-MOS is limited by the access time of the SLM, which for the case of the Hamamatsu SLM is a video rate or 30 ms / scan beam.

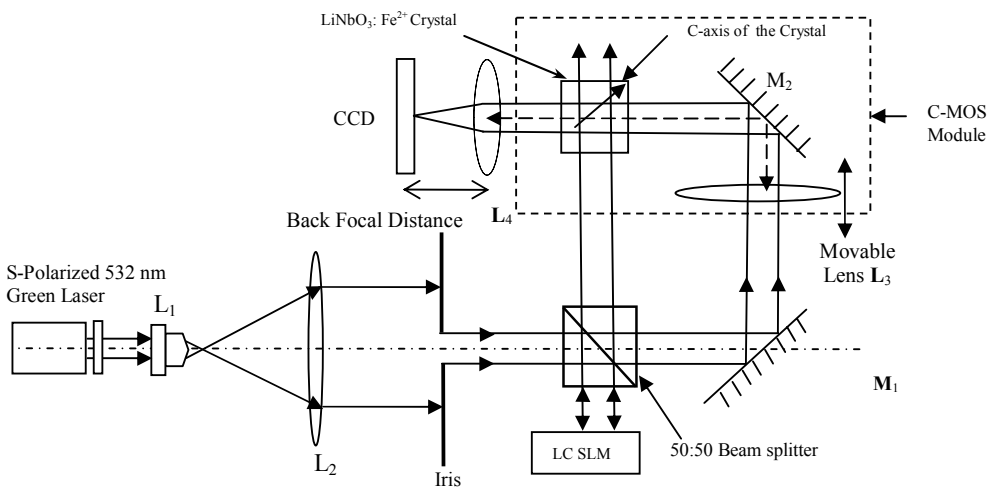

Fig. 2. Experimental setup for C-MOS demonstration using orthogonal phase codes and photorefractive crystal as holographic material for 3-D beam scanning.

In our experiment, we recorded and reproduced an 8-beam voxel (see Fig. 3) to show 3-D beamforming capability of the C-MOS. Here we produce a scan angle of $\pm 5^o$ in both x and y-direction. By changing the distance between L_3 and L_4 from 34 cm to 28 cm, a z-direction scan of 0.6 cm was obtained. The diameter of the beam was 1.5 cm which demonstrates the large aperture size capabilities of the C-MOS. As mentioned earlier, we use Hadamard codes to store holograms in the holographic medium. In our case, we used the first eight rows of the order 16 Hadamard matrix to store eight beams forming a 3-D voxel element [23]. A higher order, i.e., 16×16, matrix is used to improve C-MOS operation via selection of optimal 8 codes that give the best experimental crosstalk performance.

Downloaded From: https://www.spiedigitallibrary.org/conference-proceedings-of-spie on 07 Jun 2020
Terms of Use: https://www.spiedigitallibrary.org/terms-of-use

In another experiment, to explore the dynamic range of C-MOS scanning capability, we successfully stored and retrieved scanning beams as wide as $\pm 26.5^{o}$. This shows that our C-MOS is very effective for the applications where large scanning angles are required. Nevertheless, at present the low diffraction efficiency of the photorefractive crystal is a limitation of the demonstrated C-MOS.

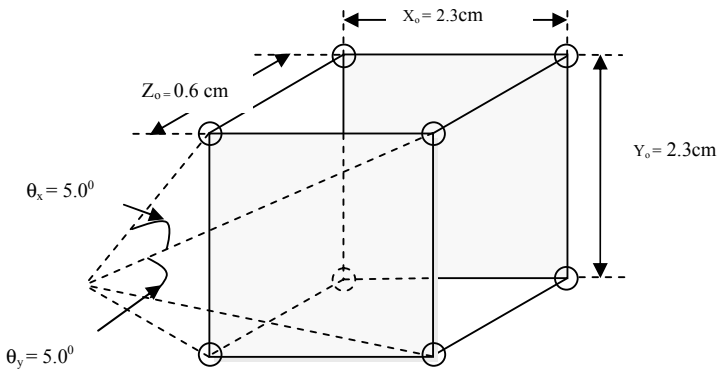

Fig. 3. 8-beam voxel measurement using the demonstrated C-MOS set-up in Fig. 1.

4. C-MOS BASED 3-D DISPLAY ARCHITECTURE

The basic building block of the proposed 3-D display is the C-MOS. A schematic diagram of the proposed 3-D display is shown in Fig. 4.

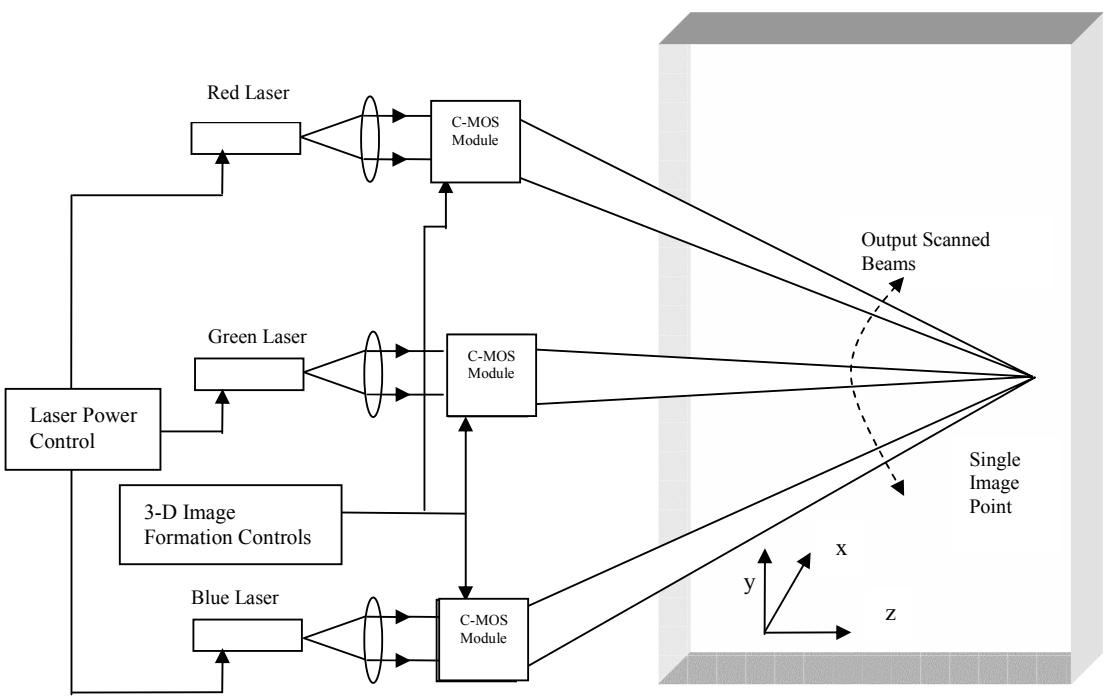

Fig. 4. Schematic Diagram of a C-MOS-based 3-D Display.

Downloaded From: https://www.spiedigitallibrary.org/conference-proceedings-of-spie on 07 Jun 2020
Terms of Use: https://www.spiedigitallibrary.org/terms-of-use

Here electronic control units control the direction of the output beam from the three basic scanning units. As demonstrated before, C-MOS can form a voxel in space. This capability can produce any type of scanning pattern in space. Hence it can be exploited to form desired images to be displayed. As is well known, every color can be produced by the appropriate mixing of three basic colors, i.e., red, green and blue. Light from three lasers, i.e., red, green, and blue are used to produce three color beams. The intensity of these beams can be controlled by the laser power control unit so that all the possible colors can be generated by appropriately mixing these laser beams at any particular point in space. These beams pass through the SLM inside the C-MOS module, takes the appropriate orthogonal phase code for the desired direction implemented via the 3-D image formation control. In the three C-MOS modules, a raster scan pattern is stored in such a way that these scanning units can produce raster scans at different planes. The raster scan produce a 2-D image in x and y direction while the z-position of this raster can be varied by using the z-scan capability of the scanner. Hence a true 3-D image can be generated by scanning point-by-point in space. This arrangement does not require any type of special equipment to see 3-D images and hence can be very useful in 3-D imaging. Moreover, the diffraction efficiency of the C-MOS is usually kept low, and hence it is not dangerous for the naked eye. Note that the output scanned beams are converging spherical beams that intersect at a common point. The intensity of the beams is controlled in such a way that the combined intensity is above threshold of the human eye only at the point where these three beams intersect. Hence an image is formed only at the focal point. By varying the focal length along the z-direction, perception of depth is produced in the 2-D image. Large scan angles and aperture sizes offered by the C-MOS are best suitable for 3-D displays for large size images and large field of views. The ability to recall linear combinations of stored scanned beams can be useful in multiple image generation or high speed operation of 3-D displays [24]. In conventional 2-D displays, image is generated through point-by-point raster scan while in the proposed C-MOS based 3-D display, this scanning can be replaced by simultaneous scanning of multiple points through the C-MOS scanner. Hence this ability adds a very powerful feature to the proposed C-MOS based 3-D display.

6. CONCLUSION

In conclusion we have proposed a novel 3-D display based on the C-MOS scanner. C-MOS scanning relies upon retrieval of holographically stored information of the scanning beam/s in a holographic material. C-MOS fabrication is done through storing multiple holograms in any holographic material using orthogonal spatial codes. This system can be implemented for true 3-D displays that do not require special optics to view 3-D images. Also it does not require any software implementation. It is suitable for large aperture and FOV 3-D display applications. This proposed 3-D display is capable of high speed operation along with the possibility of multiple image production. As a first step, a voxel has been generated experimentally to show the 3-D beam forming power of the scanner. Future work relates to implementing three simultaneous C-MOS based scanners to implement a fully colored 3-D display.

ACKNOWLEDGEMENT

This work is supported by DARPA grant N66001-98-D-6003-D.O. 0009.

REFRENCES

1. M. Gottlieb, C. L. M. Ireland, and J.M. Ley, ì Electro-Optic and Acousto-Optic Scanning and Deflection,î Marcel Dekker, (1983).
2. V. J. Fowler and J. Schlafer, ì A survey of laser beam deflection techniques,î in Proceedings of IEEE Conference, (1966), Vol. **54**, pp.1437.
3. Q. W. Song, X. Wang, R. Bussjager, and J. Osman, ì Electro-optic beam-steering device based on a lanthanum-modified lead zirconate titanate ceramic wafer,î Appl. Opt. Vol. **35**, 3155-3162, (1996).

Downloaded From: https://www.spiedigitallibrary.org/conference-proceedings-of-spie on 07 Jun 2020
Terms of Use: https://www.spiedigitallibrary.org/terms-of-use

4. N. Asada, ì Silicon micromachined two dimensional galvano optical scanner,î IEEE Trans. on Magnetics, Vol. **306**, 4647-4648, (1994).
5. N. A. Riza, ì MOST: Multiplexed Optical Scanner Technology,î in Proceedings of IEEE Annual Meeting of Lasers and Electro-Optic Society, (Institute of Electrical and Electronics engineers, 2000), pp. 828-829.
6. N.A. Riza, Y. Huang, ì High speed optical scanner for multi-dimensional beam pointing and acquisition,î in Proceedings of IEEE 12th Annual Meeting of Lasers and Electro-Optic Society, (Institute of Electrical and Electronics engineers, 2000), pp. 822-823.
7. N. A. Riza and Z. Yaqoob, ì Ultra High Speed Scanner for Optical Data Handling,î in Proceedings of IEEE 13th Annual Meeting of Lasers and Electro-Optic Society, (Institute of Electrical and Electronics engineers, Puerto Rico, 1999), pp. 262-271.
8. N. A. Riza and Z. Yaqoob, ì Agile optical beam scanners using wavelength and space manipulations,î Algorithms and Systems for Optical Information Processing V, B. Javidi; D. Psaltis eds., Proc. SPIE **4471**, pp. 262-271, (2001).
9. Z. Yaqoob and N. A. Riza, ì Free-space wavelength-multiplexed optical scanner demonstration,î , Vol. **41**, pp. 5568-5573, (2002).
10. Z. Yaqoob, A. A. Rizvi, and N. A. Riza, ì Free-space wavelength multiplexed optical scanner,î App. Opt. Vol. **40**, 6425-6438, (2001).
11. Z. Yaqoob, J. Steedle, and N. A. Riza, ì Wide Angle High Speed Large Aperture Optical Scanner,î in Proceedings of IEEE 14th Annual Meeting of Lasers and Electro-Optic Society, (Institute of Electrical and Electronics engineers, San Deigo, California, 2001), pp. 262-271.
12. N. A. Riza, ì BOPSCAN Technology: A methodology and implementation of the billion point optical scanner,î in International Optical Design Conference, L. R. Gardner; K. P. Thompson, eds. Proc. SPIE **3482**, 572-578, (1998).
13. N. A. Riza, ì Digital control polarization-based optical scanner,î US Patent 6,031,658, Feb.29, 2000.
14. N. A. Riza and S. A. Khan, ì P-MOS: Polarization Multiplexed Optical Scanner,î OSA Annual . Meeting, Orlando, USA, 2002.
15. N. A. Riza and M. A. Arain, ì Code Multiplexed Optical Scannerî , *App. Opt.* **42**, 1493, (2003).
16. M. A. Arain and N. A. Riza, ì 3 -dimensional wide scan angle optical scanning using code-multiplexed optical scannerî , *IEEE LEOS 15th Annual Meeting* (LEOS 2002) Conf. Proc. **2**, pp. 578-579, (2002).
17. R. J. Collier, C. B. Burckhardt, and L. H. Lin, Optical holography (New York, Academic, New York, 1971).
18. P.K. Rastogi, Holographic interferometry (Springer Series in Optical Sciences,Vol. 68, Springer, New York, 1994).
19. P. G¸ nter, Electro-optic and Photorefractive Materials (Springer Proceedings in Physics, Vol. **18**, Springer-Verlag, New York 1987).
20. S. A. Benton, ì Photographic Holography,î in Optics in Entertainment, C. Outwater, ed., Proc. SPIE **391**, (1983).
21. E. Downing and L. Hesselink, ì A Three-Color, Solid-State, Three-Dimensional Displayî , Science **273**, 1185 (1996).
22. J. J. Amodei and D.R. Bosomworth, ì Hologram storage and retrieval in photochromic strontium titanate crystals,î Appl. Opt.,Vol. **8**, 2473-2477, (1969).
23. R. K. Yarlagadda and J. E. Hershey, Hadamard Matrix Analysis and Synthesis With Applications to Communications and Signal / Image Processings (Kluwer Academic Press, Massachusetts, 1997).
24. J. F. Heanue, M. C. Bashaw and L. Hesselink, ì Recall of linear combinations of stored data pages based on phase-code multiplexing in volume holography,î *Opt. Lett*. **19**, 1079-1081, (1994).

Downloaded From: https://www.spiedigitallibrary.org/conference-proceedings-of-spie on 07 Jun 2020
Terms of Use: https://www.spiedigitallibrary.org/terms-of-use