Multichannel variable optical control systems for large coherent optical arrays

Riza, Nabeel

Nabeel A. Riza, "Multichannel variable optical control systems for large coherent optical arrays," Proc. SPIE 2748, Laser Radar Technology and Applications, (26 June 1996); doi: 10.1117/12.243565

Event: Aerospace/Defense Sensing and Controls, 1996, Orlando, FL, United States

Multichannel Variable Optical Control Systems for Large Coherent Optical Arrays

Nabeel A. Riza
Center for Research and Education in Optics and Lasers (CREOL)
and the Department of Electrical and Computer Engineering
University of Central Florida
P. O. Box 162700, Orlando FL 32816-2700; email: riza@creol.ucf.edu

Abstract

Novel three dimensional multichannel optical control systems are introduced for large coherent optical. array applications such as coherent laser radar and steered coherent optical communication links. Three optical control systems are introduced using a wide variety of photonic technologies such as acousto-optics, liquid crystals, bulk birefringent crystals, and polarization optics. System control speeds vary from a slow milli-second range to a fast sub-microsecond range. Each proposed system is appropriate for a particular application.

Keywords: Coherent Optical Arrays, Optical Delay, Optical Phase Compensation

2. Introduction

It is well known that coherent receive optical arrays provide certain key advantages over incoherent optical systems, such as in coherent laser radar and communications applications [1-9]. So far, a variable optical delay line for the coherent optical array application has been formed using a piezoelectrically stretched fiber device which has a slow several milliseconds response [10]. Apart from being bulky, this approach is vibration, temperature, alignment, and cost sensitive, particularly for the multi-channel large coherent optical array application with > 50 array elements. The use of waveguide-based integrated-optic phase shifters has also been suggested as these respond fast (e.g., 20 ns); nevertheless, this approach is also alignment and cost sensitive, in addition to being polarization and temperature sensitive because of the use of fiber-optics. Both the earlier mentioned optical delay methods are not common-path in nature, and thus further optical phase error compensation is required based on the environmental conditions on the different optical channels in the system. Electronic delay lines can also be used after intermediate frequency (IF) detection, but before IF summation of all signals. These electronic phase shifters can be fast (in microseconds), but are designed for a particular IF; unlike optical phase shifters that are very broadband or essentially IF insensitive. Cost and performance can also become an issue for larger arrays (e.g., > 50 elements), thus promoting optics to be a possible practical choice for large optical array receivers.

In this paper, we propose three different kinds of optical control systems for large coherent optical arrays. All control systems have an almost common-path, in-line, optical heterodyne detection-based optical design that gives inherent optical stability to the system in terms of improved resistance to external environmental effects such as air currents, temperature gradients, and vibrations. To minimize optical losses due to the polarization perturbations in the received optical beams, a simple multi-channel passive optical polarization control module is introduced that forms two independent system channels for independent coherent optical array control. The first coherent optical array control system introduced in this paper is a multi-channel narrowband analog optical-phase correction-based system using simple bulk optics and two dimensional (2-D) nematic liquid crystal (NLC) arrays. The system can independently set the desired variable optical phase delays on the N received optical signals in approximately a millisecond. Therefore, this photonic controller is geared towards slow speed applications where precise analog optical phase control is desirable. Such applications can include coherent optical communication arrays such as free-space and satellite communication optical links and weather lidars. The second type of

coherent optical array control system proposed is a multi-channel variable (digital or step-wise) optical delay line system using a multi-channel acousto-optic device (MC-AOD), a precision cut bulk birefringent crystal, and a 2-D birefringent-mode NLC array. This system can independently set the desired discrete optical delays on the N received optical signals in a fast response time of a few microseconds. Like the first system, this discrete optical delay system is also relatively insensitive to optical phase drift effects due to temperature, vibration, and other environmental effects on the optical control system. Thus, this second system provides the high speed optical delay calibration capability for coherent arrays that is required in applications such as laser radar where target speckle fluctuations can be fast (in the MHz range) due to fast rotating objects. The final system is a switched binary delay line almost common-path system using polarization-based optical switches and isotropic and birefringent bulk crystals. Using ferroelectric liquid crystals (FLCs) for optical switching, the desired optical phase and time delays can be set in a few tens of microseconds.This paper will describe the design issues and limitations of the three proposed novel adaptive optical control systems for coherent optical phased arrays.

2.0 System 1- The Multichannel Analog Optical Phase Delay Control System

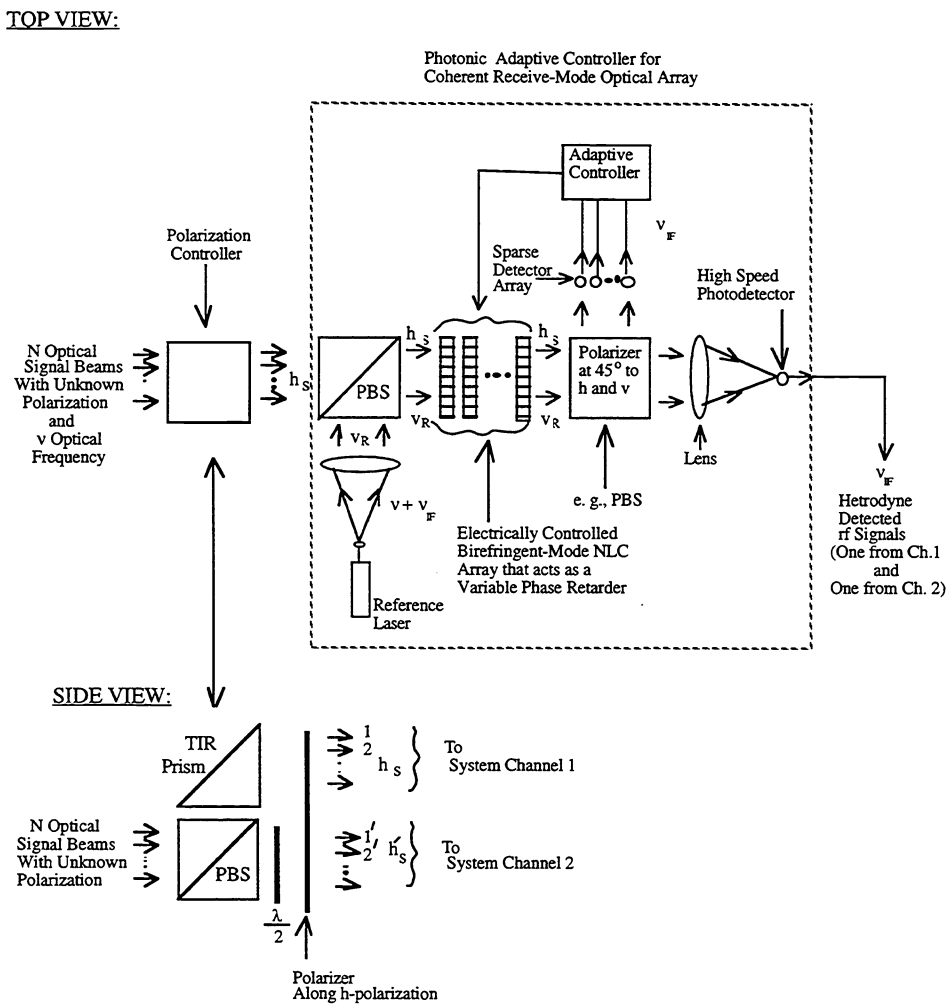

Fig.1 shows System 1 that is the proposed high channel count (e.g., 200), moderately slow speed (e.g., in a few ms), relatively short optical phase and time delay (e.g., < 16π), photonic control system for coherent optical receiver arrays.

A multi-channel analog optical phase delay system for coherent optical arrays is proposed that uses a 2-D birefringent-mode NLC array for optical phase control. A simple, passive, polarization control sub-system is shown that generates two physically separate system processing channels. Each system channel processes the optical array receive signal information for its respective horizontal (or vertical) linear polarization. The adaptive optical control system can independently set the desired variable optical phase delays on the N received optical signals, with system response time limited around the millisecond range by the strong viscous forces involved in the analog motion of the NLC molecules in the electrically controlled device. The two independent system channels (each system channel has N sub-channels) in the adaptive controller also provides the necessary compensation for input optical beam polarization changes, thus leading to higher heterodyne detection efficiency. Note that generally, input optical polarization changes occur rather slowly (seconds), and the NLCs can easily keep up with this slow variation. Also note that because we are using low cost NLC arrays much like the low cost NLC display devices common in laptop computers and wrist watches, this system is suited for large (e.g., 100 element) coherent optical arrays. Also, these optical phase shifters are analog, low control power optical devices, as pixel sizes are very small (e.g., 50 X 50 μm), leading to small electrical capacitance values. After all processing is complete, the coherent IF sum signals from Channel 1 and Channel 2 can be added after relative phase compensation to generate the total coherent sum signal.

Although, the optical phase delay process is purely analog in nature because of the gradual molecular motion of the NLC molecules when subjected to a changing external applied voltage, the NLC electrical drive voltage is typically generated via a computer-based control system and digital-to-analog converter electronics. Thus, quantization or digital control does eventually limit the system performance. With NLCs, we can quite easily provide a maximum of 1000 or 10 bits of variable optical phase delay over a 0-Nπ range. Here, N depends on the NLC device thickness d, the birefringence of the NLC material ($\Delta n = n_e - n_0$), and the optical wavelength λ. For a typical high birefringence NLC material with $\Delta n = 0.2$, $\lambda = 0.5$ μm, and d= 20 μm, the maximum optical delay for a beam passing through this NLC devices equals $2\pi N$, where $N = \{\Delta n\ d\}/\lambda = 8$. Thus, a maximum 16π optical path length difference compensation can be accomplished by a typical System 1. Longer optical path length difference compensation is possible with this system, if a cascade of independently controlled 2-D NLC devices is used in the system. Nevertheless, because of loss and resonant cavity effects, up to perhaps 6 independent anti-reflection coated devices is practical, implying a maximum of 96 π optical path length difference compensation, although, at the cost of increased NLC device control electronics.

Key features of System 1 include passive polarization control for higher optical heterodyning efficiency, 2-D NLC array design for lower system cost, multichannel-free-space-low optical interconnection design for low loss and low cost, ease in multiple beamforming via the use of free-space optics (e.g., monopulse beams), and high resolution 0-$2\pi N$ (typically, $N<8$) analog optical phase/time delay control via parallel-rub birefringent-mode NLC devices. The major limitation, at present, with this system is its millisecond response time due to the limited switching speed of presently available parallel-rub birefringent-mode NLC materials. Applications for this system include coherent optical communication arrays in free-space and sat-com links, coherent monopulse receivers, laser remote sensing, and optical sensor arrays for vibration and wind sheer detection.

3. System 2 - High Speed Multichannel Discrete Optical Delay Line System

Fig.2 shows two views of System 2. The K independent signal beams from the K-element optical receive array are combined with the IF shifted high power local oscillator reference beams using a PBS array. Note, only a single laser beam is expanded via free-space optics to form the K reference beams. The signal and reference beam pairs have orthogonal linear polarizations, with the signal beam polarizations continually set to the desired linear polarization by active optical polarization control devices such as commercially available in the fiber-optic industry. Passive polarization control can also be used as shown in system 1, but this would require adding a new system channel. The K collimated beam pairs are focussed into the corresponding channels of a MC-AOD that is fed by K optical delay control signals. The K diffracted

beam pairs from the MC-AOD can be independently set to go through different sections of a step-wise profile cut birefringent crystal. The number of different sections is equal to the total number of different delays required for the system. The AOD can provide a maximum of 1000 deflection spots or 10 bits of variable optical delay. The birefringent crystal must be cut appropriately to the right thickness to give the desired optical delay between the reference and signal beams. The switching time of the AOD deflector is fast, i.e., in microseconds or less. The lenses in the system make sure that the beams after optical delay fall on a K-element photo-sensor array that produces the K IF signals that are fed to a K-element multichannel correlation system for weight generation, and also to a K:1 IF adder for the coherent sum. Note that both the signal and reference beams through the AOD suffer the same doppler shifts; so these doppler shifts do not show up in the heterodyne detected IF signals.

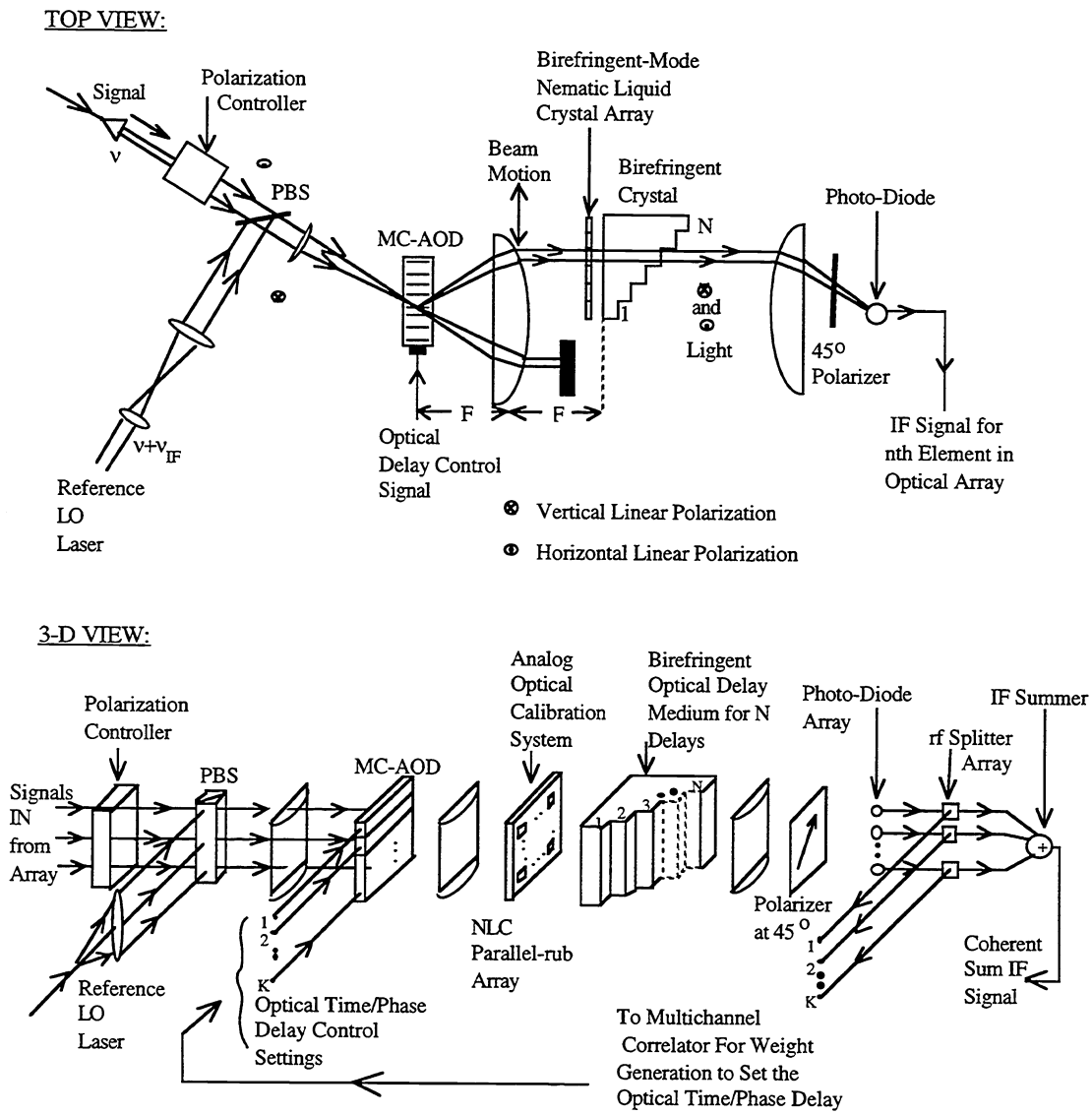

Fig.2 shows System 2 that is the proposed low channel count (e.g., < 64), high speed (e.g., in a μs or less), moderately long optical phase and time delay (e.g., < 100π),, photonic control system for coherent optical receiver arrays.

Fig.2 shows two views of System 2. The K independent signal beams from the K-element optical receive array are combined with the IF shifted high power local oscillator reference beams using a PBS array. Note, only a single laser beam is expanded via free-space optics to form the K reference beams. The signal and reference beam pairs have orthogonal linear polarizations, with the signal beam polarizations continually set to the desired linear polarization by active optical polarization control devices such as commercially available in the fiber-optic industry. Passive polarization control can also be used as shown in system 1, but this would require adding a new system channel. The K collimated beam pairs are focussed into the corresponding channels of a MC-AOD that is fed by K optical delay control signals. The K diffracted beam pairs from the MC-AOD can be independently set to go through different sections of a step-wise profile cut birefringent crystal. The number of different sections is equal to the total number of different delays required for the system. The AOD can provide a maximum of 1000 deflection spots or 10 bits of variable optical delay. The birefringent crystal must be cut appropriately to the right thickness to give the desired optical delay between the reference and signal beams. The switching time of the AOD deflector is fast, i.e., in microseconds or less. The lenses in the system make sure that the beams after optical delay fall on a K-element photo-sensor array that produces the K IF signals that are fed to a K-element multichannel correlation system for weight generation, and also to a K:1 IF adder for the coherent sum. Note that both the signal and reference beams through the AOD suffer the same doppler shifts; so these doppler shifts do not show up in the heterodyne detected IF signals.

Typical maximum atmospheric perturbations for coherent radar arrays are 400 radians or 63.66 optical cycles. For 1.06 micron light, this is 0.225 ps. If the optical transmit pulse width is 0.5 ns (for a 1 Gbps data rate), there is a 0.045 % temporal dispersion, implying that this a narrowband beamforming case and 0-2π phase control should be sufficient for coherent summation. Nevertheless, if required, true-time optical delays can be generated by the proposed optical system to reduce effects of temporal dispersion in the final coherent summation.

Key features of System 2 include fast (sub-microsecond) optical time delay control, in-line architecture for improved optical stability against external effects, multichannel free-space low optical interconnection design for low loss and low cost, and cascadeability to a polarization control structure at the input port for high optical heterodyning efficiency. Other features include ease in multiple beamforming (e.g., monopulse beams) via the use of free-space optics, 0-2π analog optical phase calibration for system fine tuning via a parallel-rub birefringent mode NLC array. The key limitation, at present, with this system is its moderate (e.g., < 64) channel count limited by the number of channels available in todays commercial MC-AODs. Another important issue is the maximum number of delays achieveable through the custom designed birefringent crystal. A typical 64 delay design is possible using state-of-the-art fabrication techniques used in crystal growth, thin films, and in general, semi-conductor processing. Applications of System 2 include coherent array laser radar (LIDAR) and imaging, coherent monopulse optical receivers, high resolution distributed coherent array tracking systems, laser remote sensing, and optical sensor arrays for vibration and wind sheer detection.

4. System 3 - High Speed Long Time Delay Multichannel Binary Switched Optical Delay Line System

Fig.3 shows how high speed N-bit optical phase and optical time delay control can be obtained using polarization optics, high speed binary optical switches such as FLCs, and fixed/slow speed optical phase/time delay plates such as isotropic crystals, birefringent-mode NLCs, or other birefringent crystals. Fig.3 is set-up using a passive optical polarization control module that generates two independent, orthogonally polarized (v: vertical; h: horizontal polarization) light beam system channels labelled "System Channel 1," and "System Channel 2." The reference local oscillator beam is introduced equally into the two independent "System Channels," to implement heterodyne detection. Note that within each optical phase/time delay single bit mini-module, there are two switched settings controlled by the two high speed binary optical switch arrays. One bit position gives a relative zero phase difference between the signal and reference beams when both beams travel

through isotropic media, while the other bit position gives the desired relative optical phase/time delay via propagation through birefringent media. Note that each bit module is designed such that at all times, the signal and reference beams travel the identical path when in the delay bit. This gives the overall control system, exceptional tolerance to externally induced optical phase instabilities in the system. Also note that the signal and reference beams are always orthogonally polarized in the control bits. Only, in the solid-optic passive interconnection modules between bits, the signal and reference beams are not in-line. Because these passive modules can be made in a solid-optic robust form, optical phase instabilities due to vibrations can be minimized. Also note that unlike the passive optic interconnection modules, the bit modules get bigger for longer optical delays, and so it is more important to have an in-line common-path design for the larger bit modules. It is important to recall that because we can use 2-D arrays of binary optical switches, all our modules are multi-channel, which can reduce overall cost of these control modules.

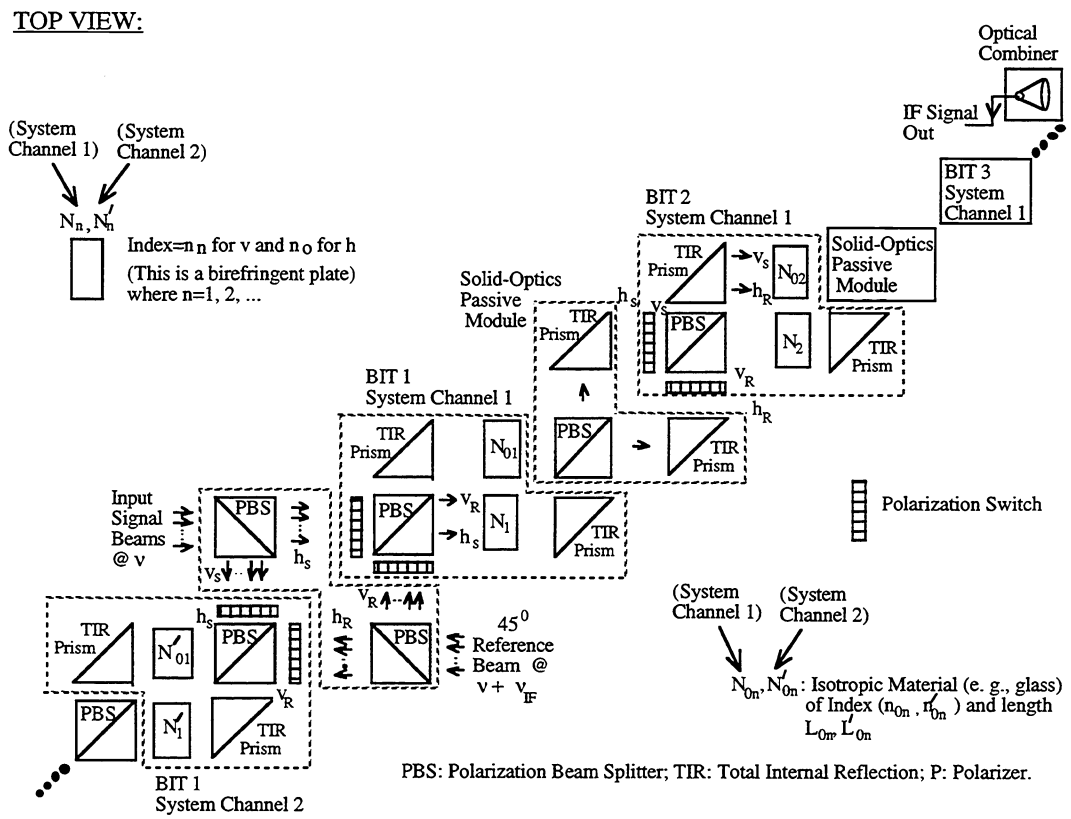

Fig.3 shows System 3 that is the proposed high channel count (e.g., 200), relatively high speed (e.g., < 25 μs), long optical phase and time delay (e.g., < 1000π),, photonic control system for coherent optical receiver arrays.

5. Conclusion

In this paper, we have introduced three novel photonic control systems for coherent receive optical arrays. The three systems vary in terms of their optical phase/time delay setting times, the number of channels possible in the system, and the quality and range of the optical phase/time delays. Depending on the needs of the particular coherent receive optical array application, one of the three systems is more suitable. Present limitations in the proposed systems are dependent on the present state-of-the-art in photonic components. Because of the modular designs of the proposed systems, future

improvements are possible with advances in photonic technology such as faster switching speed multichannel optical switches. Our future work relates to the experimental demonstration of these photonic controllers for coherent receive optical arrays.

6. References

[1] Albert V. Jelalian, *Laser Radar Systems*, Artech House, 1992.

[2] J. A. Overbeck, M. B. Mark, S. H. McCracken, P. F. Mcmanamon & B. D. Duncan, "Coherent versus incoherent ladar detection at 2. 09 μm," *Opt. Engg.*, 1993.

[3] D. K Killinger, N. Menyuk, and W. E. DeFeo, "Experimental comparison of heterodyne and direct detection for pulsed differential absorption CO_2 lidar," *Applied Optics*, Vol. 22, No. 5, pp. 682-689, 1 March, 1983.

[4] A. E. Siegman, "The antenna properties of optical heterodyne receivers," *Proceedings of the IEEE*, Vol. 54., No. 10, pp. 4470-4474, 1 Nov., 1988.

[5] L. Mandel, "Heterodyne and detection of a weak light beam," *Journal of the Optical Society of America*, Vol. 56, No. 9, pp. 1200-1206, Sep., 1966.

[6] David Fink and W. N. Samuel Vodopia, "Coherent detection SNR of an array of detectors," *Applied Optics*, Vol. 15, No. 2, pp. 453-454, Feb., 1976.

[7] Nobuo Sugimoto, Kin Pui Chan, and D. K Killinger, "Optimal heterodyne detector array size for 1-μm incoherent lidar propagation through atmospheric turbulence," *Applied Optics*, Vol. 30, No. 18, pp. 2609-2616, June, 1991.

[8] Kin Pui Chan, and D. K Killinger, "Coherent summation of spatially distorted laser Doppler signals by using a 2-dimensional heterodyne detector array," *Optics Letters*, Vol. 17, No. 17, pp. 1237-1239, Sep. 1, 1992.

[9] D. K Killinger and Kin Pui Chan, "Enhance detection of atmospheric turbulence distorted 1-μm coherent lidar returns using a 2-D heterodyne detector array," *Optics Letters*, Vol. 16, No. 16, pp. 1219-1221, 15 Aug, 1991.

[10] P. Gatt, T. P. Costello, D. C. Castellanos , and C. L. Gagge, "CREOL's real-time two aperture CW Nd:YAG coherent array," *SPIE's Applied Laser Radar Technology II Conf. Proc.* Vol. 2472, Orlando, April 20, 1995.