CORA Cork Open Research Archive
Cartlann Taighde Oscailte Chorcaí

Title	Advancement of photonic integration technology for space applications: A x-band scan-on-receive synthetic aperture radar receiver with electro-photonic beamforming and frequency downconversion capability
Authors	Mohammadhoseini, H.;Ghelfi, P.;Desoete, B.;Gabrielli, S.;Otto, T.;Mohammad, A.W.;Roeloffzen, C.;van Dijk, P.;Reza, M.;Serafino, G.;Floris, Francesco
Publication date	2021-06-11
Original Citation	Mohammadhoseini, H., Ghelfi, P., Desoete, B., Gabrielli, S., Otto, T., Mohammad, A. W., Roeloffzen, C., van Dijk, P., Reza, M., Serafino, G. and Floris, F. (2021) 'Advancement of photonic integration technology for space applications: A x-band scan-on-receive synthetic aperture radar receiver with electro-photonic beamforming and frequency down-conversion capability', International Conference on Space Optics - ICSO 2020, Online, 30 March - 2 April 2021. Proceedings of SPIE, 11852, 118522W (8pp). doi: 10.1117/12.2601247
Type of publication	Conference item
Link to publisher's version	10.1117/12.2601247
Rights	© 2021, Society of Photo-Optical Instrumentation Engineers (SPIE). Downloading of the abstract is permitted for personal use only.
Download date	2024-09-19 09:49:20
Item downloaded from	https://hdl.handle.net/10468/12106

UCC

University College Cork, Ireland

Coláiste na hOllscoile Corcaigh

PROCEEDINGS OF SPIE

SPIEDigitalLibrary.org/conference-proceedings-of-spie

Advancement of photonic integration technology for space applications: a x-band scan-on-receive synthetic aperture radar receiver with electro-photonic beamforming and frequency down-conversion capability

Mohammadhoseini, H., Ghelfi, P., Desoete, B., Gabrielli, S., Otto, T., et al.

H. Mohammadhoseini, P. Ghelfi, B. Desoete, S. Gabrielli, T. Otto, A. W. Mohammad, C. Roeloffzen, P. van Dijk, M. Reza, G. Serafino, F. Floris, "Advancement of photonic integration technology for space applications: a x-band scan-on-receive synthetic aperture radar receiver with electro-photonic beamforming and frequency down-conversion capability," Proc. SPIE 11852, International Conference on Space Optics — ICSO 2020, 118522W (11 June 2021); doi: 10.1117/12.2601247

SPIE.

Event: International Conference on Space Optics — ICSO 2021, 2021, Online Only

Downloaded From: https://www.spiedigitallibrary.org/conference-proceedings-of-spie on 12 Oct 2021 Terms of Use: https://www.spiedigitallibrary.org/terms-of-use

International Conference on Space Optics—ICSO 2020

Virtual Conference

30 March–2 April 2021

Edited by Bruno Cugny, Zoran Sodnik, and Nikos Karafolas

Advancement of photonic integration technology for space applications: a x-band scan-on-receive synthetic aperture radar receiver with electro-photonic beamforming and frequency down-conversion capability

International Conference on Space Optics — ICSO 2020, edited by Bruno Cugny, Zoran Sodnik, Nikos Karafolas, Proc. of SPIE Vol. 11852, 118522W · © 2021 ESA and CNES
CCC code: 0277-786X/21/$21 · doi: 10.1117/12.2601247

Downloaded From: https://www.spiedigitallibrary.org/conference-proceedings-of-spie on 12 Oct 2021
Terms of Use: https://www.spiedigitallibrary.org/terms-of-use

Advancement of Photonic Integration Technology for Space Applications: a X-band Scan-on-Receive Synthetic Aperture Radar Receiver with Electro-Photonic Beamforming and Frequency Down-Conversion Capability

H. Mohammadhoseini[1], P. Ghelfi[2], B. Desoete[1], S. Gabrielli[3], T. Otto[3], A. W. Mohammad[4], C. Roeloffzen[4], P. Van Dijk[4], M. Reza[2], G. Serafino[2], F. Floris[5]

[1] Antwerp Space|an OHB company, Antwerp, Belgium
[2]PNTLab – CNIT, TeCIP Institute, Scuola Superiore Sant'Anna, Pisa, Italy
[3]OHB system, Bremen, Germany
[4]LioniX International, Enschede, The Netherlands
[5]Tyndall national institute, Cork, Irland

ABSTRACT

Synthetic Aperture Radar is a well-known technique for remote sensing applications with great advantages like uninterrupted imaging capabilities even at night or in presence of cloud cover. However, spaceborne SAR sensors face major challenges such as cost and size, which are among the barriers against their applicability for future constellations of low-Earth observation applications. SAR sensors are not compact and require large or medium-sized satellites, which cost hundreds million dollars. To solve these challenges, the recently started SPACEBEAM project, funded by the European Commission, aims at developing a novel SAR Scan-on-Receive approach, exploiting a hybrid integrated optical beamforming network (iOBFN). The compactness and frequency flexibility of the proposed photonic solution complies with the requirements of future constellations of low-Earth orbit satellites in terms of size, weight, power consumption, and cost (SWaP-C).

In the design of the SCORE SAR receiver module, we target the development of an X-band receiver having a large swath width of 50 km (5 times wider than state-of-art spaceborne SAR systems), although at the same time enabling a fine spatial resolution of 1.5 m in both along-track and across-track directions.

In this paper, we present specifications and preliminary design of the SCORE-SAR receiver at equipment level, where we aim at the realization of a hermetically packaged hybrid InP/TriPleX™ photonic integrated circuit (PIC) for this application. We target the design for the PIC as well as for the RF front-end and control electronics, enabling the electro-photonic frequency down-conversion of the RF signals and the fast control of iOBFN with <300 ns switching time.

Keywords: Synthetic Aperture Radar, Scan-on-Receive, optical beam forming

1. INTRODUCTION

Earth observation (EO) satellites have been powerful tools to understand planetary changes. In particular, EO data play an important role in environmental monitoring by enabling users to compare images of Earth over time and investigate large-scale phenomena [1]. Microwave remote sensing with synthetic aperture radar (SAR) systems on Satellite missions plays a key role in these applications. For the EO, an advanced Synthetic Aperture Radar (SAR) mode has been introduced called scan-on-receive (SCORE). In conventional Strip map SAR, the along-track spatial resolution and across-track swath-width are inversely related to each other through the pulse repetition frequency (PRF). If a good along-track spatial resolution is required, hence also a large Doppler bandwidth, a high PRF needs to be used in order not to infringe the Nyquist criteria. On the other hand, a wide swath-width requires a low PRF in order to avoid ambiguities because the swath width is limited by the time between the transmissions of two pulses. This conflicting relationship fixes the lower and upper limit of the PRF also known as minimum SAR antenna area. SCORE based radar architecture is conceived to overcome this limitation [2] . The SCORE principle consists in the illumination of a wide swath. Several simultaneously synthesized high-gain receive beams are steered in the fast-time domain over the whole swath to receive the scattered echoes. A SCORE SAR system can be implemented with a direct radiating array. An alternative is a reflector antenna which is fed by a feed array. To implement the SCORE, on-board digital beamforming (DBF) by on-board processing is currently considered to synthesize the needed simultaneous receive beams. Due to the large data amounts which need to be processed for such a DBF, only the next generation of space-qualified FPGAs are deemed as a

Downloaded From: https://www.spiedigitallibrary.org/conference-proceedings-of-spie on 12 Oct 2021
Terms of Use: https://www.spiedigitallibrary.org/terms-of-use

valid solution for a heavy signal processing. The required massive on-board data processing for digital beamforming results in a large power consumption and big limitation on heat dissipation which comes in addition to the power consumption for the transmitter high-power amplification stage. Therefore, the application of such digital SCORE would be limited to large spacecrafts. In order to make such advanced observation modes also available for smaller SAR missions, an alternative compact and less power-hungry implementation of the on-board beamforming is needful. Optical beamforming (OBF) in general and photonic integrated circuit (PIC)-based OBF networks (OBFN) specifically provides these features intrinsically. Due to their broadband nature, less sensitivity to the electromagnetic interference, low loss and data-transparent link capacity, they have already penetrated various technology domains as well as radar systems [3], [4].

In this paper, we present the architecture of a completely functional, space-compliant SCORE-SAR receiver module in which the downconversion to intermediate frequency (IF), as well as the multi-beam photonics-assisted beamforming of the received RF signals are operated by a PIC driven by a laser and an electrical local oscillator (LO).

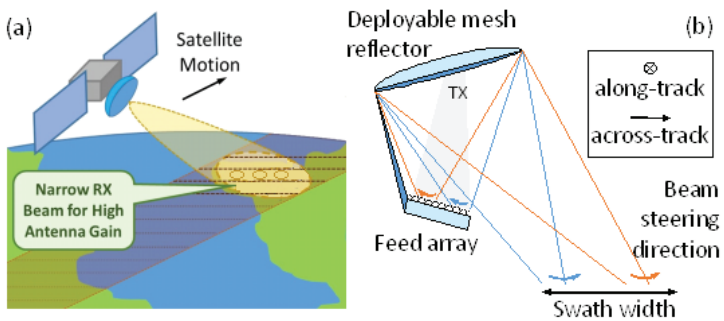

Figure 1. (a) Graphical explanation of the scan-on-receive SAR concept. (b) Beamforming based on feed array and reflector antenna, where each beam employs a subset of the feed array elements.

2. SYSTEM SPECIFICATIONS

The payload requirements (performance, antenna, receiver structure and features) are summarised in the table below for the device flight design. In this phase of project, our focus is on a functional model, to investigate the functionality of the developed SCORE-SAR receiver based on the photonic beamformer taking into account these requirements. To this extent, the core block of the system, represented by the hybrid PIC assembly, will be placed on top of a thermo-electric cooler (TEC), and wire-bonded to a printed circuit board (PCB) to manage the access to the RF and DC controls of the PIC. An optical fiber connector will also be implemented to have access to the monitoring points within the PIC. In the next phase, which consists in the realization of an elegant bread board (EBB), the naked hybrid PIC will be assembled on a TEC and placed inside a hermetic package with RF/DC ports. This packaged PIC (called PPIC hearafter) will be treated as an electrical and electronic equipment (EEE) device in the EBB enclosure. The PPIC will then undergo the environmental testing for demonstrating its space compliance. The other EEE devices included in the EBB will be space-grade components.

Table 1: Payload performance, antenna and receiver requirements

Parameter	**Requirement / Value**
SAR Payload, Orbit and End-to-End Performance Requirements	
Sensor Type	Spaceborne SAR Sensor
Orbit Height	> 500 km
Incidence Angle	> 20°
Frequency band	X-band
Swath Width (across-track)	> 30 km, target: >50 km
Swath Length (along-track)	> 30 km, target: >50 km
Ground Resolution	< 1.5 m × 1.5 m (along-track × across-track)

Downloaded From: https://www.spiedigitallibrary.org/conference-proceedings-of-spie on 12 Oct 2021
Terms of Use: https://www.spiedigitallibrary.org/terms-of-use

Noise Equivalent Sigma Zero NESZ (Sensitivity)	< -20 dB
Ambiguity to Signal Ratio (ASR)	< -20 dB
System Noise figure	≤ 6.3 dB
SAR antenna	
Type	Focal plane array antenna with reflector
Feed Array: Number of Elements	12
Feed elements spacing	≤0.89λ
Tx Gain	> 43 dB
Tx Elevation Beamwidth	> 5 deg
Tx Azimuth Beamwidth	> 0.7 deg
Rx Scan Range	> 5 deg
Rx Gain	> 47 dB
Rx Azimuth Beamwidth	> 0.7 deg
Receiver	
Functions	• Rx protection • Signal reception and amplification • Rx beamforming • RF signal downconversion and digitization • Internal calibration signal distribution • Data reduction and formatting
RF Bandwidth	≥ 390 MHz
Rx System Losses	1.0 dB
Receiver Input RF Power	-89.6 dBm to -57.1 dBm
Receiver Dynamic Range	≥ 32.5 dB
Receiver Gain	≥ 50 dB
Beamformer Requirements	see next part
ADC resolution	better than 9 bit
Data Reduction	Block Adaptive Quantisation
BEAMFORMER RF REQUIREMENTS	
Function	• Rx beamforming • RF signal down-conversion
RF Input Signal Level	-53.7 dBm to -21.4 dBm
RF Input Signal Dynamic Range	≥32.5 dB
IF Centre Frequency	in the range of 1000 MHz – 2000 MHz, target 1300 MHz
Simultaneous beams	≤ 3
Number of adjacent feed elements to be combined for one beam	≤ 5
Number of beam steering directions	> 50, target >100
Dwell time	≤ 2.6 µs, target ≤ 1.3 µs
Beam switching time	≤ 300 ns, target ≤ 100 ns
Beamforming weights amplitude accuracy	≤ 0.25 dB, target ≤ 0.2 dB
Beamforming weights phase accuracy	≤ 10 deg

Downloaded From: https://www.spiedigitallibrary.org/conference-proceedings-of-spie on 12 Oct 2021
Terms of Use: https://www.spiedigitallibrary.org/terms-of-use

3. PHOTONIC BEAMFORMER

The beamforming network consists of a TriPleX chip and four InP chips attached to it, as shown in the functional design of Figure 2. As shown in the figure, the passive components such as the laser cavity, the filters, the splitters, and the Blass Matrix, all depicted inside the light-blue square in Figure 2, are realized in TriPleX. The active components, enclosed in the four red boxes in Figure 2, are realized in InP, including the laser gain section, the photodetectors, and the Mach-Zehnder modulators (MZMs), which are co-integrated with semiconductor optical amplifiers (SOAs).

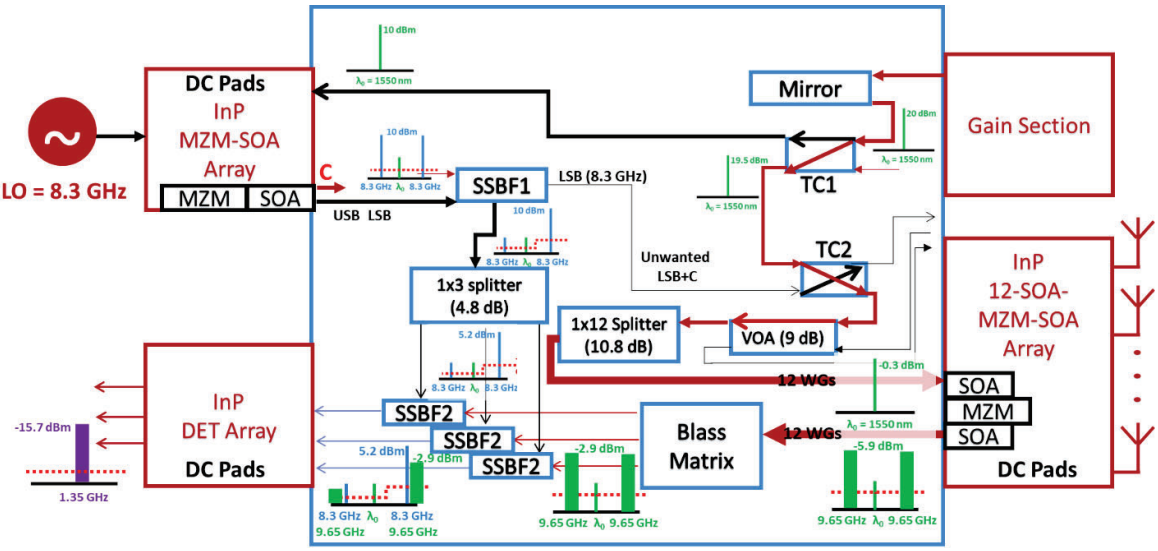

Figure 2. Functional design of the hybrid PIC.

The signal flow can be described as follows. The laser gain section, together with the resonator in TriPleX, generates a 20 dBm laser carrier at λ_0=1550nm. This carrier is split by a tunable coupler (TC1). The first output of TC1 is a 10 dBm carrier that feeds an MZM-SOA chip. This MZM is modulated by a strong RF tone (9.8 dBm) generated by the LO at 8.3 GHz. The output of this MZM is filtered in TriPleX to reduce the amplified spontaneous emission (ASE) noise of the SOA and to select only one side frequency. Then, it is split by a 1-by-3 splitter. The second output of TC1 is a 19.5 dBm signal, and its power is controlled by a variable optical attenuator (VOA) to optimize the power at the input of the modulators at the next stage. This carrier is split by the 1-by-12 splitter to feed the 12 MZMs in the 12-SOA-MZM-SOA InP chip. Each of these 12 MZMs is modulated by a weak signal (-10 dBm) that emulates the received SAR back-scattered RF signal that is coupled through the antenna, and it has a bandwidth of 390 MHz and centered at 9.65 GHz. Here, each MZM is monolithically integrated with two SOAs to boost the optical signal power before and after the modulation. After that, the 12 modulated signals are combined in a 12-by-3 Blass Matrix, after which they are filtered to reduce the ASE noise of the SOAs and to select only one sideband. Each of these three signals at (193.41 THz + 9.65 GHz) is combined with the three outputs of the 1-by-3 splitter at (193.41 THz + 8.3 GHz) and applied to the photodiode chip to generate three beamformed RF signals at 1.35 GHz, that will be eventually digitized by the analogue-to-digital converter (ADC). It is worth noting that, based on the analyses reported in [4], no more than five received RF channels, i.e. of antenna array elements inputs, are employed to synthesize each one of the three beams. Simulations in VPIphotonics and analytical calculations in MATLAB were performed, that estimated the PIC RF gain at -5.7 dB and the noise figure at 25.5 dB, assuming a photodiode responsivity of 0.8 A/W. More details on the design of the photonic-RF beamformer can be found in [5].

4. RF FRONT-END IN FUNCTIONAL MODEL

The block diagram of the equipment with focus on the RF design is shown below (Figure 3). Each array antenna element is equipped with a dedicated amplification chain, which is mainly responsible for the amplification of the weak signals coming from the antenna. The PIC will act as a beamformer and frequency down-converter, as explained before, and the

Downloaded From: https://www.spiedigitallibrary.org/conference-proceedings-of-spie on 12 Oct 2021
Terms of Use: https://www.spiedigitallibrary.org/terms-of-use

IF chain amplifies the signals up to a required power by the ADCs. In order to estimate the output power in every stage, we performed a cascade analysis where we have taken into account all of components from the input up to the ADC. Figure 4 shows the analysis results for the best and worst case for 1 channel and as well as combining 5 channels (as an example). The worst and best case are defined based on minimum and maximum power levels that Rx can handle which are -89.6 dBm and -57.1 dBm. The separation between the two curves in the top and bottom after stage 8 is the result of combining the channels. Based on the cascade analysis, the noise figure of the receiver chain is ~ 2.2 dB.

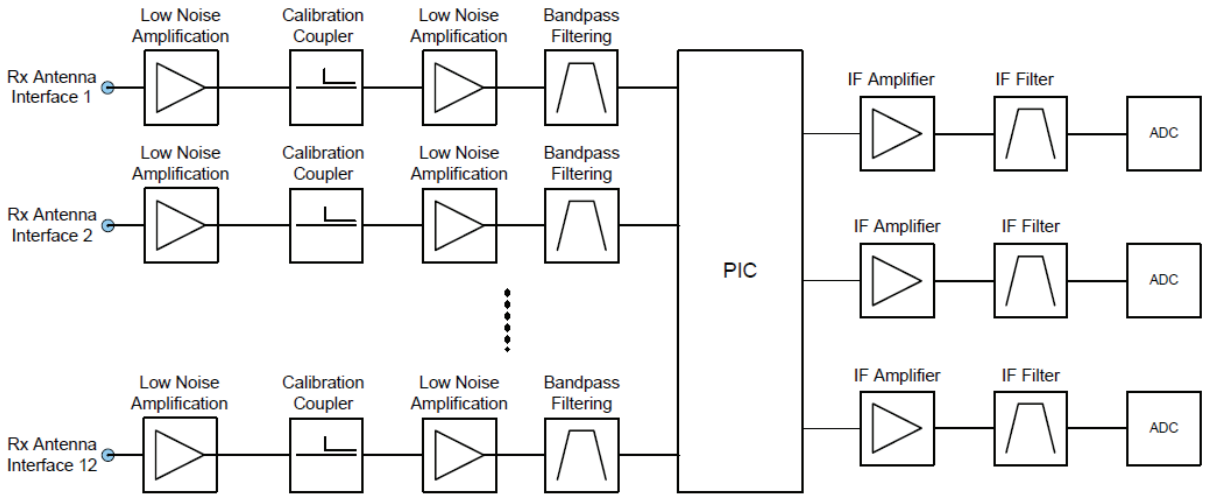

Figure 3. Block diagram showing the RF front-end and PIC for every channel in the receiver chain.

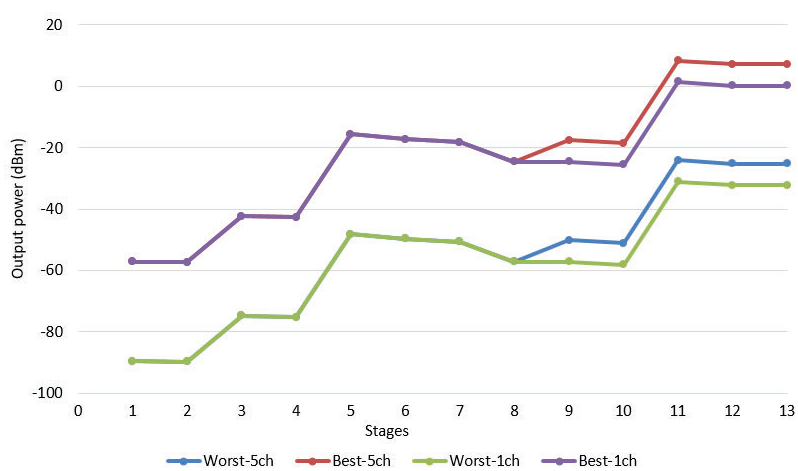

Figure 4. Output power of the receiver chain in every stage

Downloaded From: https://www.spiedigitallibrary.org/conference-proceedings-of-spie on 12 Oct 2021
Terms of Use: https://www.spiedigitallibrary.org/terms-of-use

5. PIC PACKAGING

Photonic packaging covers the mechanical, thermal, electrical/electronic, and optical coupling of PICs to the outside world (Figure 5). The challenges associated with the packaging of photonic devices is often underestimated and remains technically challenging due to the variety and complexity of the technologies and materials involved, combined with the lack of standards available to PIC designers.

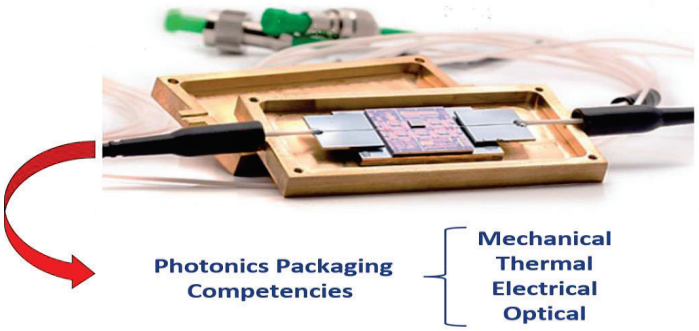

Figure 5. Photonics Packaging Competencies

To ensure that the PICs can be packaged efficiently and reproducibly, it is important to optimize and standardize their layout so that generic packages and packaging processes can be utilized.

To aid with this, the PIC packaging optimization and design in SPACEBEAM will be developed in collaboration with PIXAPP, the world's first open access PIC assembly & packaging Pilot Line. In PIXAPP a series of photonic packaging design rules (PDRs) have been defined in order to cover the most widely used packaging and assembly technologies and materials. These PDRs specify the acceptable dimensions and locations of the optical and electronic input or output ports together with the electric connections on a PIC, with respect to the physical footprint of the PIC-die in order to ensure that any device is compatible with every level of production making it immediately market ready and avoiding, therefore, subsequent highly expensive redesign and tests in terms of both time and money.

Combining all these concepts with the here-presented hybrid PIC requirements, a design based on a two level interposer has been identified as the most promising solution in terms of compatibility with either the compliance with the specifications for space applications and the PDRs, as reported in Figure 6. In this figure, the different colors identify different PIC sections. The big blue square represents the TriPleX section containing passive devices. The smaller purple rectangle on the left represents the InP section containing the first MZM-SOA, which is directly fed by the laser and by the electrical LO. The other green rectangle on the right contains the InP array of 12 SOA-MZM-SOAs and the PDs. The orange rectangle on the right is the first level interposer while the large red frame is the second level interposer. This solution is able to overcome the intrinsic geometrical asymmetry of the Hybrid-PIC, making the assembly mechanically more robust and easier to handle, and at the same time overtaking the complicate disposition of the DC connections and RF channels. The final result is a clean and tiny design of the Hybrid-PIC assembly fully compatible with the state-of-the-art PDRs of PIXAPP. As a consequence, this enables us to resort to the PIXAPP RF Prototype Package Gold Box as a valid option for the SPACEBEAM external housing. Applying a minimal customization, mainly related to the number of DC connections and RF channels and corresponding disposition, the SPACEBEAM Package will guarantee the conformity of all the RF, DC, mechanical and thermal specifications in a fully working packaging.

In the end, this solution will also significantly affect the cost of assembling prototype photonic packages as well as how this is scaled to volume manufacturing as it can represent from 50% up to 80% of the cost of a final device.

Downloaded From: https://www.spiedigitallibrary.org/conference-proceedings-of-spie on 12 Oct 2021
Terms of Use: https://www.spiedigitallibrary.org/terms-of-use

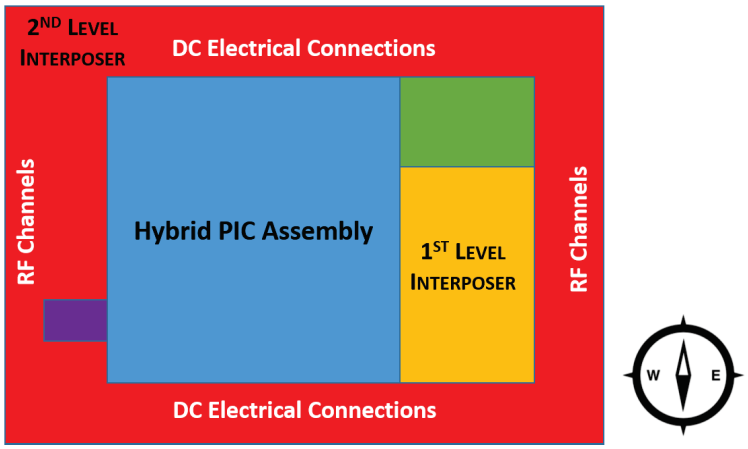

Figure 6. PIXAPP - Photonic packaging compass-coordinate system used to label the PIC and RF channels and DC electrical connections disposition rule applied to the hybrid-PIC assembly.

6. CONCLUSION

In summary, we have presented high-level specifications, an initial design of an optical beam forming network, RF front-end, and packaging of such equipment for a novel SCORE radar receiver. The optical beamforming as a core of this work, ensures the frequency-agnostic operation with high precision and continuous beam steering. The photonic part also implements a frequency down-conversion of the received RF signals, so that the output signal can be directly acquired by an ADC, without any further RF down-conversion stage.

REFERENCES

[1] K. Anderson, et al. “Earth observation in service of the 2030 Agenda for Sustainable Development,” Geo-spatial Information Science 20.2, pp. 77-96, (2017).

[2] S. Huber, Spaceborne SAR Systems with Ditigal Beamforming and Reflector Antenna, Dissertation, DLR Forschungsbericht, (2014).

[3] P. Ghelfi, et al., “A fully photonics-based coherent radar system,” Nature 507, pp. 341–345, (2014).

[4] L. Bliek, et al, “Automatic delay tuning of a novel ring resonator-based photonic beamformer for a transmit phased array antenna” JLT, pp. 4976-4984, (2019).

[5] M. Reza et al., "Design of an Integrated-Photonics RF Beamformer for Multi-Beam Satellite Synthetic Aperture Radar," 2020 International Topical Meeting on Microwave Photonics (MWP), Matsue, Japan, 2020, pp. 87-90.

Downloaded From: https://www.spiedigitallibrary.org/conference-proceedings-of-spie on 12 Oct 2021
Terms of Use: https://www.spiedigitallibrary.org/terms-of-use