CORA Cork Open Research Archive
Cartlann Taighde Oscailte Chorcaí

Title	Forward error correction analysis for 10Gb/s burst-mode transmission in TDM-DWDM PONs
Authors	Brandonisio, Nicola;Porto, Stefano;Carey, Daniel;Ossieur, Peter;Talli, Giuseppe;Parsons, Nick;Townsend, Paul D.
Publication date	2017-06-01
Original Citation	Brandonisio, N., Porto, S., Carey, D., Ossieur, P., Talli, G., Parsons, N. and Townsend, P. D (2017) 'Forward error correction analysis for 10Gb/s burst-mode transmission in TDM-DWDM PONs', 2017 Optical Fiber Communications Conference and Exhibition (OFC) Los Angeles, CA, USA, 19-23 March. doi:10.1364/OFC.2017.Th2A.28
Type of publication	Conference item
Link to publisher's version	http://www.osapublishing.org/abstract.cfm?URI=OFC-2017-Th2A.28 - 10.1364/OFC.2017.Th2A.28
Rights	© 2017, Optical Society of America. One print or electronic copy may be made for personal use only. Systematic reproduction and distribution, duplication of any material in this paper for a fee or for commercial purposes, or modifications of the content of this paper are prohibited.
Download date	2024-04-16 21:45:47
Item downloaded from	https://hdl.handle.net/10468/5562

UCC
University College Cork, Ireland
Coláiste na hOllscoile Corcaigh

Forward Error Correction Analysis for 10Gb/s Burst-Mode Transmission in TDM-DWDM PONs

Nicola Brandonisio[1], Stefano Porto[1], Daniel Carey[1], Peter Ossieur[1], Giuseppe Talli[1], Nick Parsons[2] and Paul Townsend[1]

[1]*Tyndall National Institute, University College Cork, Cork, Ireland.*
[2]*Polatis Ltd., Cambridge, UK.*
nicola.brandonisio@tyndall.ie

Abstract: The performance limits of 10Gb/s forward error correction for a PON upstream channel are analyzed experimentally by measuring true burst-mode pre- and post-error correction BER, frame loss rate and error location within the burst frame.
OCIS codes: (060.2330) Fiber optics communications; (060.4510) Optical communication

1. Introduction

Forward error correction (FEC) is essential to realize the transmission link within the strict optical power budget allowed by current passive optical network (PON) standards [1,2,3]. The evolution of the standards toward 10Gb/s line rate for the upstream link will introduce further challenges for the optical components and in particular on the burst-mode receiver (BMRx) in the optical line terminal (OLT), which will increase the need for FEC in the upstream link. Dynamically reconfigurable time-division multiplexing (TDM) dense wavelength division multiplexing (DWDM) long-reach PONs (LR-PONs) promise an efficient access solution to enable the convergence of multiple services on a high capacity, flexible infrastructure [4], which can potentially enable a reduction in the overall number of network interfaces and switches [5]. Fig. 1(a) illustrates the TDM-DWDM LR-PON concept, which can support multiple 10Gb/s channels, using a single optical amplifier node (AN). FEC will also be essential for these architectures due to the increased requirements introduced on the optical and electronic components. Widely used error correction codes for 10Gb/s PONs are Reed Solomon (RS) (248,216) [1,2] and (255,223) [3]. Assuming a memoryless channel with uncorrelated and uniformly distributed bit errors, the theoretical performance restores a 1.1E-3 pre-FEC bit-error rate (BER) to a 1E-12 post-FEC BER [6]. However, PON upstream channels operate in burst-mode, hence non-uniformly distributed and correlated bit errors may be introduced by slow transients from turn-on effects in the burst-mode transmitter in the optical network unit (ONU), residual gain transients from erbium-doped fiber amplifiers (EDFAs) [7], and transients in the BMRx. This may lead to reduced error correcting capability in the upstream channel, which needs to be taken into account in the PON design [8,9]. In this paper we present a detailed performance analysis of the RS(248,216) FEC for burst-mode transmission at 10Gb/s in a TDM-DWDM LR-PON. True burst mode operation of the FEC is implemented in field programmable gate array (FPGA) chips allowing the experimental analysis of the relationship between pre-FEC BER, post-FEC BER and frame loss rate (FLR) as a function of the length of the clock recovery preamble. The distribution of the errors within an FEC block of the upstream burst has also been characterized confirming that error location analysis is a powerful tool for evaluating the FEC performance in TDM-DWDM LR-PON.

2. Experimental setup

Fig. 2 presents the physical layer experimental setup used in this work, highlighting the details of the optical distribution network (ODN), of the backhaul link, and of the AN design such as amplifier gain and channel powers. This architecture has been previously presented in detail in [4, 10] and can support a reach of 100km, 512 users and an emulated system load of 40 channels. In contrast with [4, 10], in this work only the EDFA based-AN and the

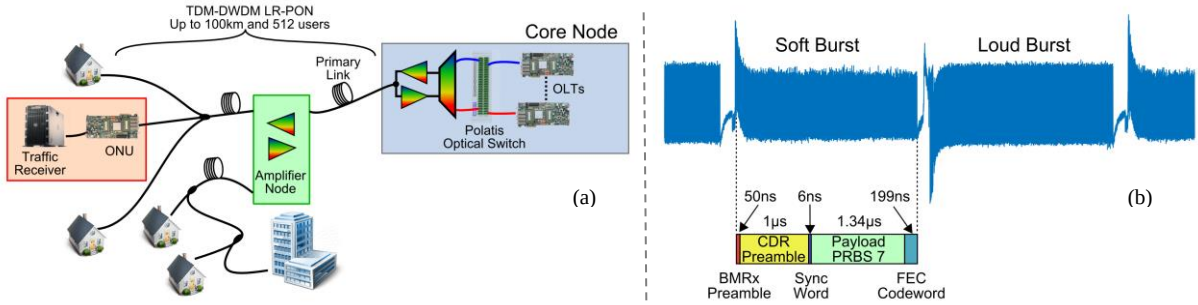

Fig. 1. (a) High level network architecture; (b) Electrical output from the LBMRx and corresponding burst structure for a launched DR of ~17dB.

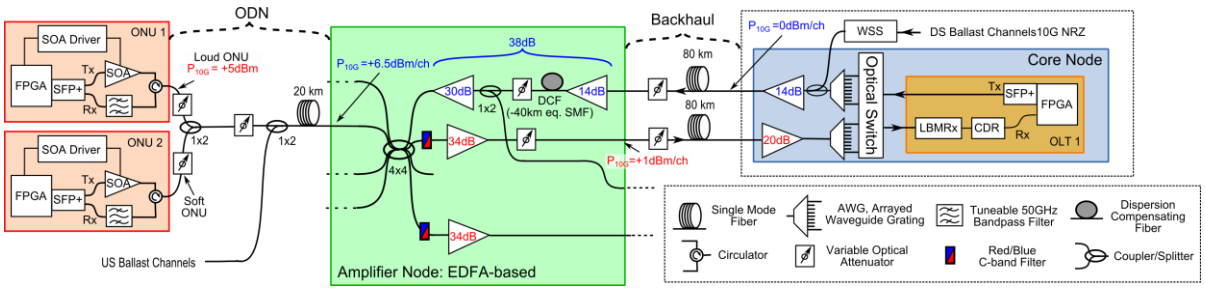

Fig. 2. Experimental setup.

primary path have been used. The downstream signals are amplified using a two stage EDFA configuration with a mid-stage dispersion compensating fiber (DCF) module, equivalent to 40km of standard single mode fiber (SMF). Attenuators are added at various points in the system to emulate end of life SMF attenuation (0.3dB/km) and realistic splitter losses of 3.5dB in the ODN for each ×2 split. All the EDFAs used in upstream are commercial devices with fast gain stabilization in order to reduce the impact of gain transients induced by the burst traffic. Additional traffic (not shown in Fig. 2), with a power equivalent to 40 channels in both upstream and downstream directions, is added to fully load the network. The OLT and ONU transmitters are commercial tunable 10G SFP+ transceivers, while the wavelength selection at the receivers is achieved by using a 50GHz tunable filter at the ONU and by routing the ports of a wavelength demultiplexer at the OLT using a Polatis optical switch. At the OLT a linear burst-mode receiver (LBMRx) is followed by a static electronic dispersion compensation-clock data recovery (CDR) module. A simplified protocol, which controls the ONU burst timings, is implemented in the OLT and ONUs using FPGAs. An example of the equalized electrical output from the LBMRx is presented in Fig. 1(b) alongside the corresponding burst structure used in this analysis. The FEC algorithm has also been implemented on the FPGAs, both in upstream and downstream directions, based on RS(248,216) [2], by using a group of 8 interleaved standard RS decoders for processing 8 symbols simultaneously with a bit rate of 10Gb/s.

3. Results

As previously reported in [7, 10] the burst mode upstream FEC performance can be close to its theoretical limits [6]. Fig. 3 presents the relation between post-FEC BER and pre-FEC BER comparing theory and measurements obtained by varying the ODN loss for both ONUs with a CDR preamble length of 1µs. However, the RS decoders can deviate from this ideal behavior when the error distribution is non-uniform within the FEC block [9], as demonstrated by the experimental results presented in Fig. 4, where the CDR preamble length is varied. In Fig. 4(a) the launch power of the ONUs has been adjusted in order to transmit soft bursts from both ONUs with a DR of ~0dB. In this case, although the pre-FEC BER of the ONUs is always lower than the FEC threshold at 1.1E-3, the post-FEC BER is greater than 1E-12 for a preamble shorter than ~200ns. The measured FLR, shown in Fig. 4(a) for both ONUs, also starts to increase when the preamble length is decreased below ~500ns, demonstrating that the FLR deteriorates before the FEC performance starts to degrade. This behavior can be attributed to the interleaved implementation of the FEC decoders, which leads to more robust correction capability. As a consequence**,** the evaluation of the performance of a burst-mode system only based on measurements of pre- and post-BER could be misleading, as correlated or localized errors at the beginning of the burst could degrade the FLR. These considerations are also valid for Fig. 4(b), where the DR is set to ~17dB. In this case, ONU2 (soft burst) shows similar performance to the 0dB DR case, while the FLR and pre-FEC BER of ONU1 (loud burst) increase above 1E-12 for preambles shorter

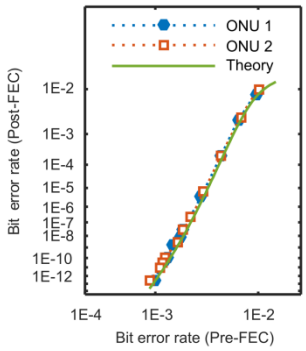

Fig. 3. Measured vs. theoretical FEC performance.

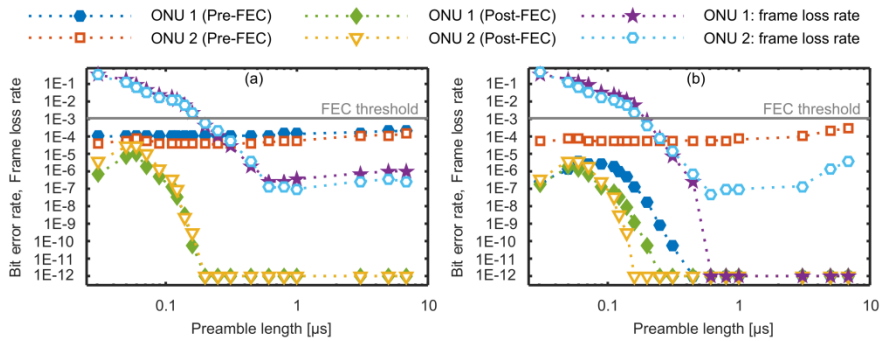

Fig. 4. Impact of preamble length on the BER and FLR for (a) 0dB and (b) ~17dB dynamic range.

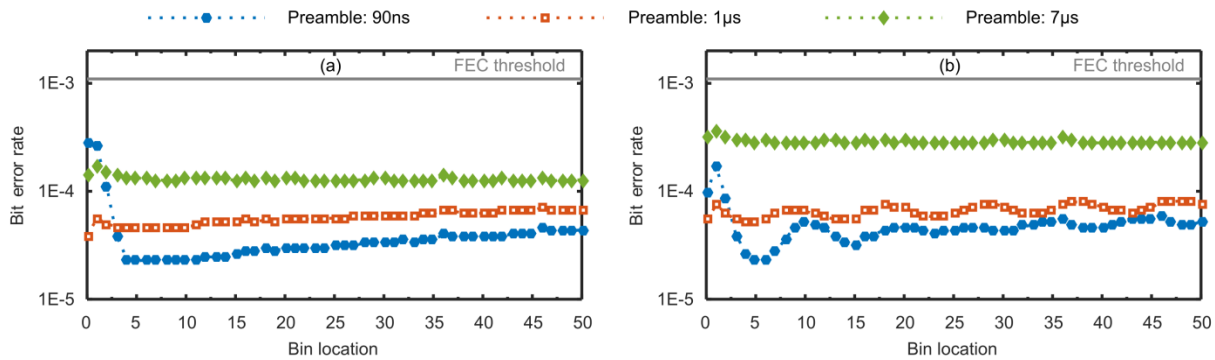

Fig. 5 Histograms of the error distribution along a single FEC block for ONU2 using 24.8ns bin duration with DR of ~0dB (a) and ~17dB (b).

than ~500ns. In order to understand this observed variation of FLR and FEC performance the histogram of pre-FEC BER measured for ONU2 (soft burst) along with one single interleaved FEC block for different preamble lengths is presented in Fig. 5. For this analysis each point has been determined using a bin size comprised of 4 groups of 8 interleaved FEC symbols with a total duration of approximately 24.8ns. The DR is set to ~0dB in Fig. 5(a) and to ~17dB in Fig. 5(b). In both cases the histograms demonstrate that the measured error distribution is approximately uniform for long preambles (1µs and 7µs), while a peak in the error distribution appears at the beginning of the burst for short preambles (90ns). This peak strongly affects the FEC performance because it involves the first 4 bins, for a total of 16 groups of interleaved FEC symbols, which correspond to the error correction limit of the RS(248,216). It is important to note that we do not observe any peak in the error distributions when consecutive bursts are sent from a single ONU (not shown here). This implies that this peak is caused by a transient behavior from the CDR unit of the OLT receiver in burst mode operation. A similar explanation can be drawn for the FLR. In fact, a peak in the BER at the beginning of the burst implies a higher probability of losing the synchronization word and, hence, a higher probability of losing an entire frame, even though the average pre-FEC BER is below 3.1E-2 [2], which is the detection limit of the frame synchronizer implemented on the FPGAs. It should be noted, however, that the CDR employed in this experiment is a commercially available unit that is not designed for PON applications and, consequently, the time limitations might be reduced to tens of nanoseconds by using an optimized CDR unit. However, we believe that the same conclusions would apply in terms of FEC performance and FLR.

4. Conclusions

The performance of FEC for upstream burst-mode transmission at 10Gb/s in a TDM-DWDM LR-PON has been examined in detail. In this context, the key role of the error distribution within the burst is demonstrated by analyzing the case where the CDR preamble length is varied. While the average pre-FEC BER stays approximately constant, a degradation of the FLR and the FEC performance is noticed for short preambles, demonstrating that error location analysis is an important and powerful tool for evaluating the performance of burst mode links.

5. Acknowledgments

Financial support from Science Foundation Ireland (SFI) (grants 12/IA/1270, 12/RC/2276 and 10/CE/I1853), and EU FP7 project DISCUS (grant CNECTICT-318137) is gratefully acknowledged.

6. References

[1] ITU-T recommendation G989.2, https://www.itu.int/rec/T-REC-G.989.2.
[2] ITU-T recommendation G987.3, https://www.itu.int/rec/T-REC-G.987.3.
[3] IEEE 802.3av 10G-EPON standard, 2009.
[4] G. Talli et al., "Demonstration of SDN Enabled Dynamically Reconfigurable High Capacity Optical Access for Converged Services," Proc. OFC, paper PDPTh5B.1, Anaheim, 2016.
[5] M. Ruffini et al., "DISCUS: An end-to-end solution for ubiquitous broadband optical access," Communications Magazine, IEEE, vol.52, no.2, pp.S24,S32, Feb. 2014.
[6] ITU-T recommendation G975, https://www.itu.int/rec/T-REC-G.975-200010-I.
[7] D. Carey et al., "Dynamically Reconfigurable TDM-DWDM PON Ring Architecture for Efficient Rural Deployment," Proc. ECOC, paper W.3.E.4, Sept. 2016.
[8] E.I. de Betou et al., "Upstream FEC performance in combination with burst-mode receivers for next generation 10Gbit/s PONs," Proc. ECOC, paper Mo.2.B.5, Sept. 2010.
[9] D. Brunina et al., "Analysis of Forward Error Correction in the Upstream Channel of 10Gb/s Optically Amplified TDM-PONs,"Proc. OFC, Th4H.3, Los Angeles, 2015.
[10] G. Talli et al., "SDN Enabled Dynamically Reconfigurable High Capacity Optical Access Architecture for Converged Services," Journal of Lightwave Technology, DOI 10.1109/JLT.2016.2604864.